ZANEEN®

| | |
|---|---|
| PROJECT | |
| TYPE | |
| SPECIFIER | |
| QUANTITY | |
| DATE | |

# MINI ONE 2.0 SURFACE

**E9C109-** _____ - _____ - _____

base number | Color Temperature | L9 Finishes-06-08 | Lens Options

*1.To build a product code in our configurator select the specify button on the base model # product page*
*2. To build a manual product code on this datasheet choose from the options listed below in blue font and add the suffix to the base model #*

**GENERAL**

Series: Mini One 2.0
Brand: Platek
Division: Exterior
Mounting Type: Surface
Mounting Location: Ceiling
Subcategory: Downlight

**PHYSICAL**

Shape: Cube
Length (mm): 100
Length (in): 3 15/16
Width (mm): 100
Width (in): 3 15/16
Height (mm): 100
Height (in): 3 15/16
Light Distribution: Downlight
Weight (kg): 1.1
Weight (lbs): 2.43
Diffuser: Serigraphed extra-clear glass
Fixture Finish: GRY / ANT
Fixture Material: Aluminum Die Cast
Upon Request: Finishes - Black, White, Bronze, Corten

**ELECTRICAL**

Lamp Type: LED
Input Wattage (W): 11
Dimming: Non-Dimmable
Driver Included: No
Driver Location: Remote
Driver Type: Constant Current - 120Vac
Driver Class: Class 2
Input Voltage (V): 120
Constant Current (MA): 700

**LED**

Color Temperature (°K): 2700 / 3000 / 4000
Max. Delivered Lumen (lm): 555 - 585
Nominal Lumen (lm): 660 - 690
CRI: >80 CRI
Lamp Life (hrs): 60000

**OPTICAL**

Optic°: 45 / 60

**RATINGS AND CERTIFICATIONS**

Certified By: Certified for North American Standards
IP rating: IP65
IK Rating: IK07

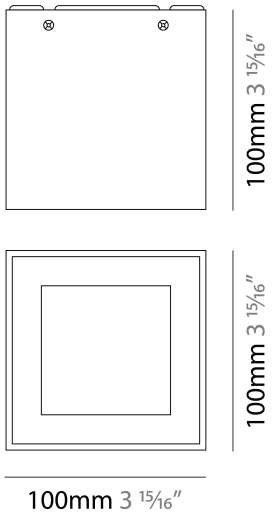




Zaneen Group Inc. © 2024, T 1800-388-3382, F 416-247-9319, www.zaneen.com
Available for International specifications by adding 'INT' at the end of the existing Model #. For assistance on 'custom' specifications, contact zteam@zaneen.com.
In a constant effort to supply the best product, we reserve the right to change specifications or materials without notice. The most recent specification sheets are found at zaneen.com

ZANEEN®

| | |
|---|---|
| PROJECT | |
| TYPE | |
| SPECIFIER | |
| QUANTITY | |
| DATE | |

## MINI ONE 2.0 SURFACE

E9C109-

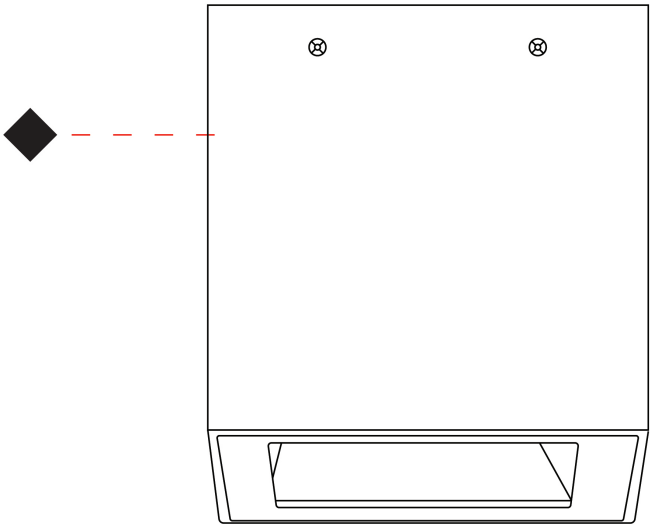

E



Zaneen Group Inc. © 2024, T 1800-388-3382, F 416-247-9319, www.zaneen.com

Available for International specifications by adding 'INT' at the end of the existing Model #. For assistance on 'custom' specifications, contact zteam@zaneen.com.
In a constant effort to supply the best product, we reserve the right to change specifications or materials without notice. The most recent specification sheets are found at zaneen.com

ZANEEN®

| | |
|---|---|
| PROJECT | |
| TYPE | |
| SPECIFIER | |
| QUANTITY | |
| DATE | |

# MINI ONE 2.0 SURFACE

**E9F353-** _____ - _____ - _____

base number | Color Temperature | L9 Finishes-06-08 | Lens Options

*1.To build a product code in our configurator select the specify button on the base model # product page*
*2. To build a manual product code on this datasheet choose from the options listed below in blue font and add the suffix to the base model #*

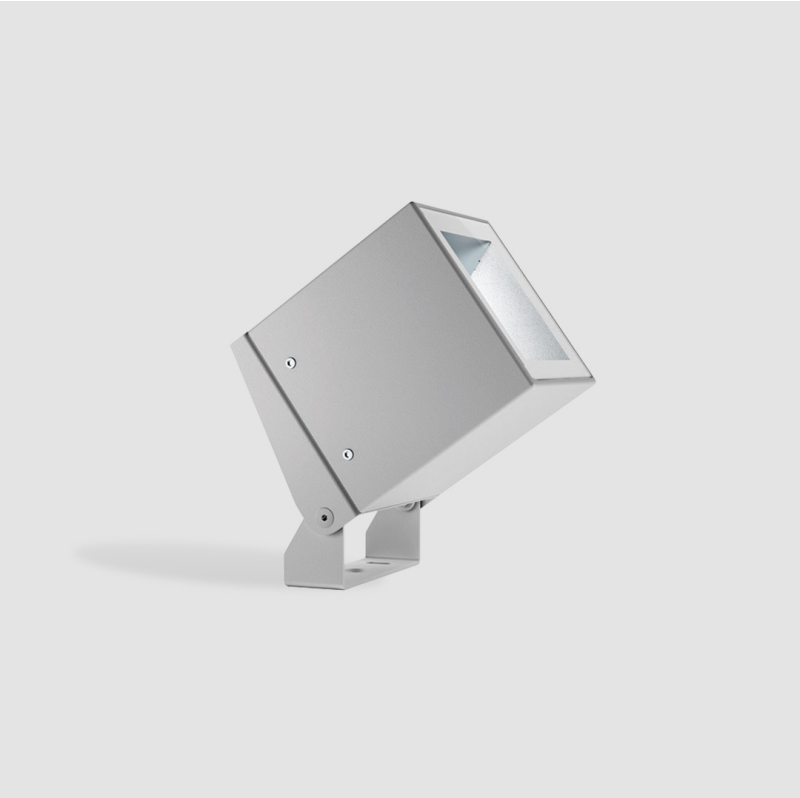

**GENERAL**

Series: Mini One 2.0
Brand: Platek
Division: Exterior
Mounting Type: Surface
Mounting Location: Above Ground
Subcategory: Flood

**PHYSICAL**

Shape: Cube
Length (mm): 100
Length (in): 3 15/16
Width (mm): 100
Width (in): 3 15/16
Depth (mm): 125
Depth (in): 4 15/16
Light Distribution: Adjustable / Direct
Weight (kg): 1.1
Weight (lbs): 2.43
Diffuser: Serigraphed extra-clear glass
Fixture Finish: GRY / ANT
Fixture Material: Aluminum Die Cast
Upon Request: Finishes - Black, White, Bronze, Corten

**ELECTRICAL**

Lamp Type: LED
Input Wattage (W): 11
Dimming: Non-Dimmable
Driver Included: No
Driver Location: Integrated
Driver Type: Constant Current - 120Vac
Driver Class: Class 2
Input Voltage (V): 120 - 277
Constant Current (MA): 700

**LED**

Number of LEDs: 3
Color Temperature (°K): 2700 / 3000 / 4000
Max. Delivered Lumen (lm): 510 - 580
Nominal Lumen (lm): 600 - 630
CRI: >80 CRI
Lamp Life (hrs): 60000

**OPTICAL**

Optic°: 12 / 33 / 45
Adjustability: Tilt +110° / - 6°

**RATINGS AND CERTIFICATIONS**

Certified By: Certified for North American Standards
IP rating: IP66
IK Rating: IK08

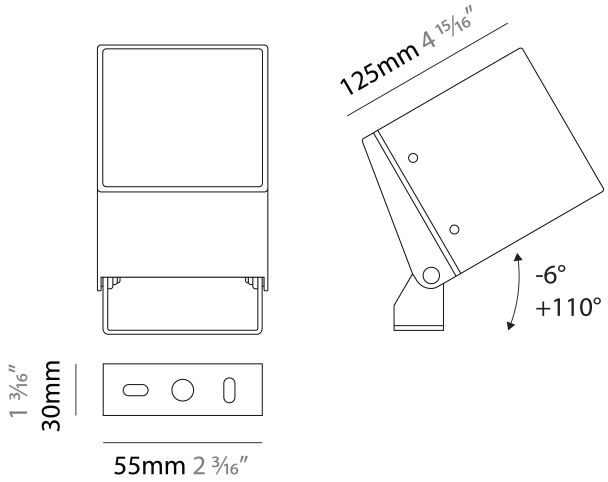




Zaneen Group Inc. © 2024, T 1800-388-3382, F 416-247-9319, www.zaneen.com
Available for International specifications by adding 'INT' at the end of the existing Model #. For assistance on 'custom' specifications, contact zteam@zaneen.com.
In a constant effort to supply the best product, we reserve the right to change specifications or materials without notice. The most recent specification sheets are found at zaneen.com

ZANEEN®

## MINI ONE 2.0 SURFACE

| | |
|---|---|
| PROJECT | |
| TYPE | |
| SPECIFIER | |
| QUANTITY | |
| DATE | |

E9F353-

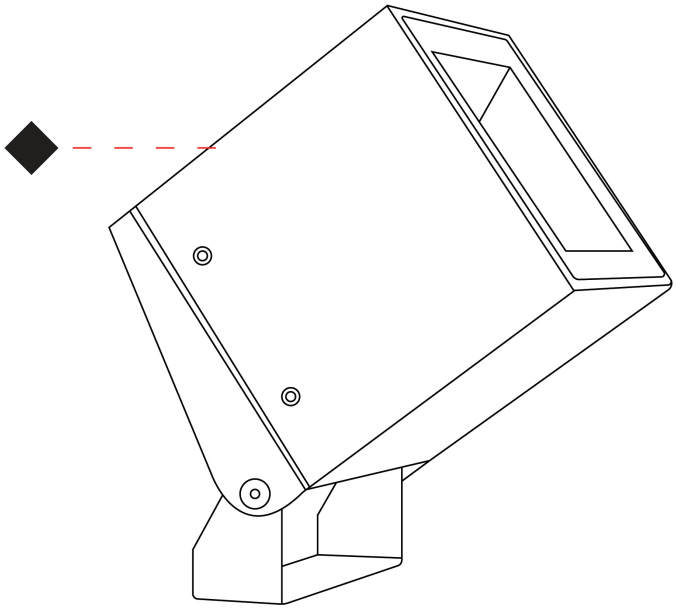

E



Zaneen Group Inc. © 2024, T 1800-388-3382, F 416-247-9319, www.zaneen.com

Available for International specifications by adding 'INT' at the end of the existing Model #. For assistance on 'custom' specifications, contact zteam@zaneen.com.
In a constant effort to supply the best product, we reserve the right to change specifications or materials without notice. The most recent specification sheets are found at zaneen.com

ZANEEN®

| | |
|---|---|
| PROJECT | |
| TYPE | |
| SPECIFIER | |
| QUANTITY | |
| DATE | |

# MINI ONE 2.0 SURFACE

**E9W619- _____ - _____**

base number | Color Temperature | Finish Options

*1.To build a product code in our configurator select the specify button on the base model # product page*
*2. To build a manual product code on this datasheet choose from the options listed below in blue font and add the suffix to the base model #*

**GENERAL**

Series: Mini One 2.0
Brand: Platek
Division: Exterior
Mounting Type: Surface
Mounting Location: Wall
Subcategory: Wall Effect

**PHYSICAL**

Shape: Cube
Width (mm): 100
Width (in): 3 15/16
Height (mm): 100
Depth (mm): 100
Height (in): 3 15/16
Depth (in): 3 15/16
Light Distribution: Direct
Weight (kg): 1.1
Weight (lbs): 2.43
Screws: No visible screws
Diffuser: Serigraphed extra-clear glass
Fixture Finish: BLK / WHI / GRY / COR / ANT / BRZ
Fixture Material: Aluminum Die Cast

**ELECTRICAL**

Lamp Type: LED
Input Wattage (W): 3
Dimming: Non-Dimmable
Driver Included: Yes
Driver Location: Integrated
Driver Type: Constant Current - Universal
Driver Class: Class 2
Input Voltage (V): 120 - 277
Constant Current (MA): 350

**LED**

Number of LEDs: 1
Color Temperature (°K): 2700 / 3000 / 4000
Max. Delivered Lumen (lm): 25
CRI: >90 CRI
Lamp Life (hrs): 60000

**OPTICAL**

Optic°: 1 Opening
Beam Angle: Diffused

**RATINGS AND CERTIFICATIONS**

Certified By: Certified for North American Standards
IP rating: IP65
IK Rating: IK07

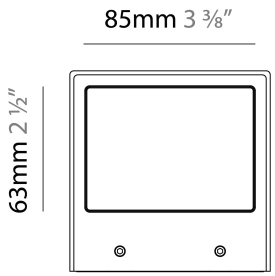


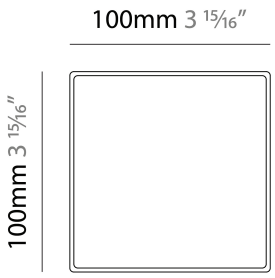


E



Zaneen Group Inc. © 2024, T 1800-388-3382, F 416-247-9319, www.zaneen.com

Available for International specifications by adding 'INT' at the end of the existing Model #. For assistance on 'custom' specifications, contact zteam@zaneen.com.
In a constant effort to supply the best product, we reserve the right to change specifications or materials without notice. The most recent specification sheets are found at zaneen.com

ZANEEN®

| | |
|---|---|
| PROJECT | |
| TYPE | |
| SPECIFIER | |
| QUANTITY | |
| DATE | |

## MINI ONE 2.0 SURFACE

E9W619-

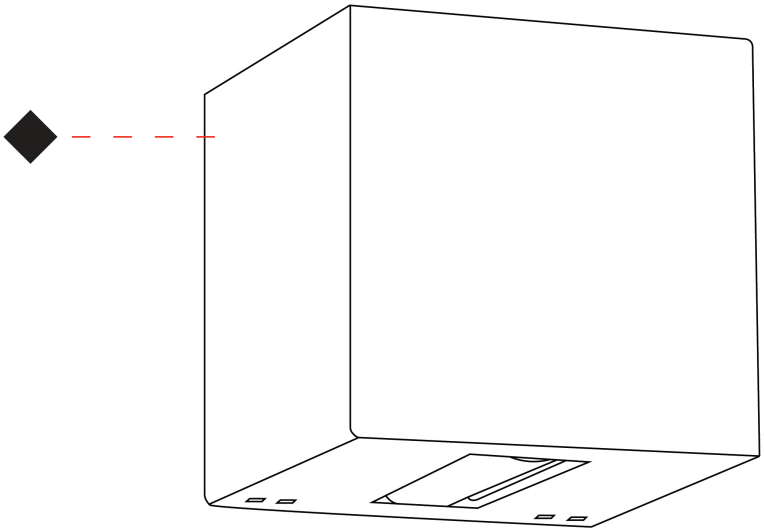

E



Zaneen Group Inc. © 2024, T 1800-388-3382, F 416-247-9319, www.zaneen.com

Available for International specifications by adding 'INT' at the end of the existing Model #. For assistance on 'custom' specifications, contact zteam@zaneen.com.
In a constant effort to supply the best product, we reserve the right to change specifications or materials without notice. The most recent specification sheets are found at zaneen.com

ZANEEN®

| | |
|---|---|
| PROJECT | |
| TYPE | |
| SPECIFIER | |
| QUANTITY | |
| DATE | |

# MINI ONE 2.0 SURFACE

**E9W620- _____ - _____**

base number | Color Temperature | Finish Options

*1.To build a product code in our configurator select the specify button on the base model # product page*
*2. To build a manual product code on this datasheet choose from the options listed below in blue font and add the suffix to the base model #*

**GENERAL**

Series: Mini One 2.0
Brand: Platek
Division: Exterior
Mounting Type: Surface
Mounting Location: Wall
Subcategory: Wall Effect

**PHYSICAL**

Shape: Cube
Width (mm): 100
Width (in): 3 15/16
Height (mm): 100
Depth (mm): 100
Height (in): 3 15/16
Depth (in): 3 15/16
Light Distribution: Direct
Weight (kg): 1.1
Weight (lbs): 2.43
Screws: No visible screws
Diffuser: Serigraphed extra-clear glass
Fixture Finish: BLK / WHI / GRY / COR / ANT / BRZ
Fixture Material: Aluminum Die Cast

**ELECTRICAL**

Lamp Type: LED
Input Wattage (W): 4
Dimming: Non-Dimmable
Driver Included: Yes
Driver Location: Integrated
Driver Type: Constant Current - Universal
Driver Class: Class 2
Input Voltage (V): 120 - 277
Constant Current (MA): 350

**LED**

Number of LEDs: 2
Color Temperature (°K): 2700 / 3000 / 4000
Max. Delivered Lumen (lm): 50
CRI: >90 CRI
Lamp Life (hrs): 60000

**OPTICAL**

Optic°: 2 Opening
Beam Angle: Diffused

**RATINGS AND CERTIFICATIONS**

Certified By: Certified for North American Standards
IP rating: IP65
IK Rating: IK07

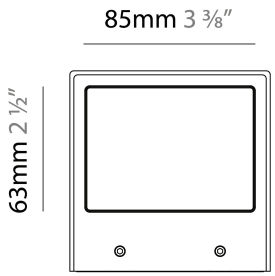


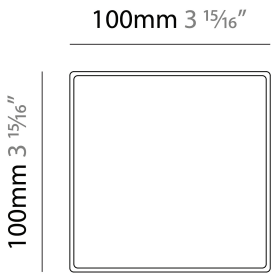


E



Zaneen Group Inc. © 2024, T 1800-388-3382, F 416-247-9319, www.zaneen.com

Available for International specifications by adding 'INT' at the end of the existing Model #. For assistance on 'custom' specifications, contact zteam@zaneen.com.
In a constant effort to supply the best product, we reserve the right to change specifications or materials without notice. The most recent specification sheets are found at zaneen.com

ZANEEN®

| | |
|---|---|
| PROJECT | |
| TYPE | |
| SPECIFIER | |
| QUANTITY | |
| DATE | |

## MINI ONE 2.0 SURFACE

E9W620-

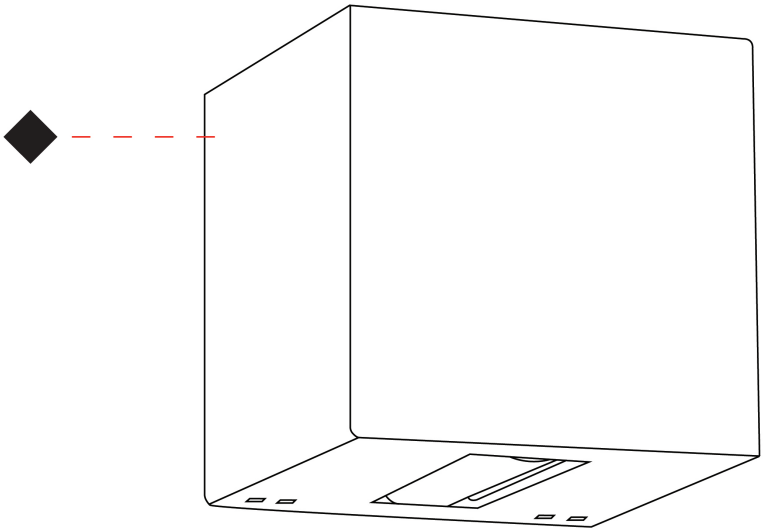

E



Zaneen Group Inc. © 2024, T 1800-388-3382, F 416-247-9319, www.zaneen.com

Available for International specifications by adding 'INT' at the end of the existing Model #. For assistance on 'custom' specifications, contact zteam@zaneen.com.
In a constant effort to supply the best product, we reserve the right to change specifications or materials without notice. The most recent specification sheets are found at zaneen.com

ZANEEN®

| | |
|---|---|
| PROJECT | |
| TYPE | |
| SPECIFIER | |
| QUANTITY | |
| DATE | |

# MINI ONE 2.0 SURFACE

**E9W621-** _____ - _____

base number | Color Temperature | Finish Options

*1.To build a product code in our configurator select the specify button on the base model # product page*
*2. To build a manual product code on this datasheet choose from the options listed below in blue font and add the suffix to the base model #*

**GENERAL**

Series: Mini One 2.0
Brand: Platek
Division: Exterior
Mounting Type: Surface
Mounting Location: Wall
Subcategory: Wall Effect

**PHYSICAL**

Shape: Cube
Width (mm): 100
Width (in): 3 15/16
Height (mm): 100
Depth (mm): 100
Height (in): 3 15/16
Depth (in): 3 15/16
Light Distribution: Direct
Screws: No visible screws
Diffuser: Serigraphed extra-clear glass
Fixture Finish: BLK / WHI / GRY / COR / ANT / BRZ
Fixture Material: Aluminum Die Cast

**ELECTRICAL**

Lamp Type: LED
Input Wattage (W): 7.6
Dimming: Non-Dimmable
Driver Included: Yes
Driver Location: Integrated
Driver Type: Constant Current - Universal
Driver Class: Class 2
Input Voltage (V): 120 - 277
Constant Current (MA): 350

**LED**

Number of LEDs: 4
Color Temperature (°K): 2700 / 3000 / 4000
Max. Delivered Lumen (lm): 100
CRI: >90 CRI
Lamp Life (hrs): 60000

**OPTICAL**

Optic°: 4 Opening
Beam Angle: Diffused

**RATINGS AND CERTIFICATIONS**

Certified By: Certified for North American Standards
IP rating: IP65
IK Rating: IK07

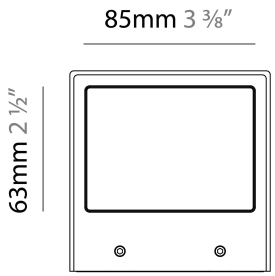


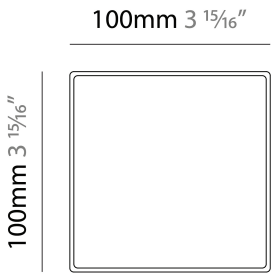


E



Zaneen Group Inc. © 2024, T 1800-388-3382, F 416-247-9319, www.zaneen.com

Available for International specifications by adding 'INT' at the end of the existing Model #. For assistance on 'custom' specifications, contact zteam@zaneen.com.
In a constant effort to supply the best product, we reserve the right to change specifications or materials without notice. The most recent specification sheets are found at zaneen.com

ZANEEN®

| | |
|---|---|
| PROJECT | |
| TYPE | |
| SPECIFIER | |
| QUANTITY | |
| DATE | |

## MINI ONE 2.0 SURFACE

E9W621-

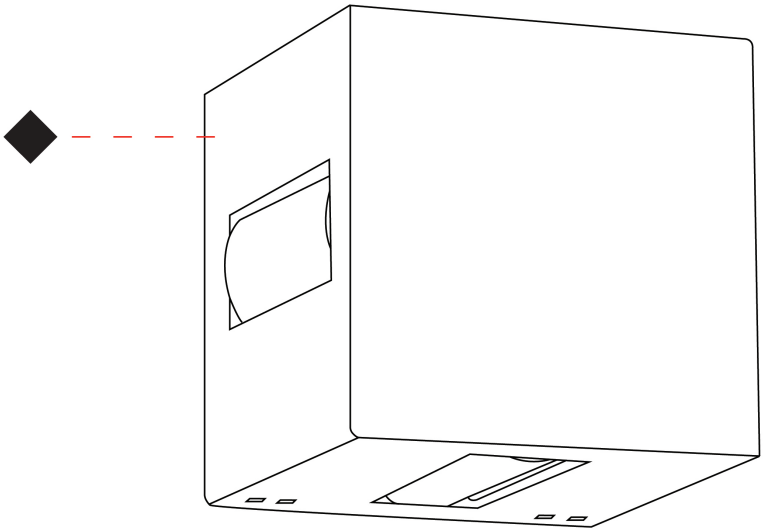

E



Zaneen Group Inc. © 2024, T 1800-388-3382, F 416-247-9319, www.zaneen.com

Available for International specifications by adding 'INT' at the end of the existing Model #. For assistance on 'custom' specifications, contact zteam@zaneen.com.
In a constant effort to supply the best product, we reserve the right to change specifications or materials without notice. The most recent specification sheets are found at zaneen.com

ZANEEN®

| | |
|---|---|
| PROJECT | |
| TYPE | |
| SPECIFIER | |
| QUANTITY | |
| DATE | |

# MINI ONE 2.0 SURFACE

**E9W623-** _____ - _____

base number | Color Temperature | Finish Options

*1.To build a product code in our configurator select the specify button on the base model # product page*
*2. To build a manual product code on this datasheet choose from the options listed below in blue font and add the suffix to the base model #*

**GENERAL**

Series: Mini One 2.0
Brand: Platek
Division: Exterior
Mounting Type: Surface
Mounting Location: Wall
Subcategory: Wall Effect

**PHYSICAL**

Shape: Cube
Width (mm): 100
Width (in): 3 15/16
Height (mm): 100
Depth (mm): 100
Height (in): 3 15/16
Depth (in): 3 15/16
Light Distribution: Direct
Screws: No visible screws
Diffuser: Serigraphed extra-clear glass
Fixture Finish: BLK / WHI / GRY / COR / ANT / BRZ
Fixture Material: Aluminum Die Cast

**ELECTRICAL**

Lamp Type: LED
Input Wattage (W): 4
Dimming: Non-Dimmable
Driver Included: Yes
Driver Location: Integrated
Driver Type: Constant Current - Universal
Driver Class: Class 2
Input Voltage (V): 120 - 277
Constant Current (MA): 350

**LED**

Number of LEDs: 2
Color Temperature (°K): 2700 / 3000 / 4000
Max. Delivered Lumen (lm): 198
CRI: >90 CRI
Lamp Life (hrs): 60000

**OPTICAL**

Optic°: 90
Beam Angle: Diffused

**RATINGS AND CERTIFICATIONS**

Certified By: Certified for North American Standards
IP rating: IP65
IK Rating: IK07

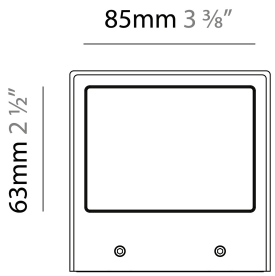


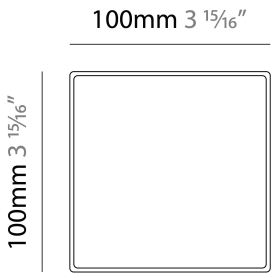




Zaneen Group Inc. © 2024, T 1800-388-3382, F 416-247-9319, www.zaneen.com

Available for International specifications by adding 'INT' at the end of the existing Model #. For assistance on 'custom' specifications, contact zteam@zaneen.com.
In a constant effort to supply the best product, we reserve the right to change specifications or materials without notice. The most recent specification sheets are found at zaneen.com

ZANEEN®

| | |
|---|---|
| PROJECT | |
| TYPE | |
| SPECIFIER | |
| QUANTITY | |
| DATE | |

## MINI ONE 2.0 SURFACE

E9W623-

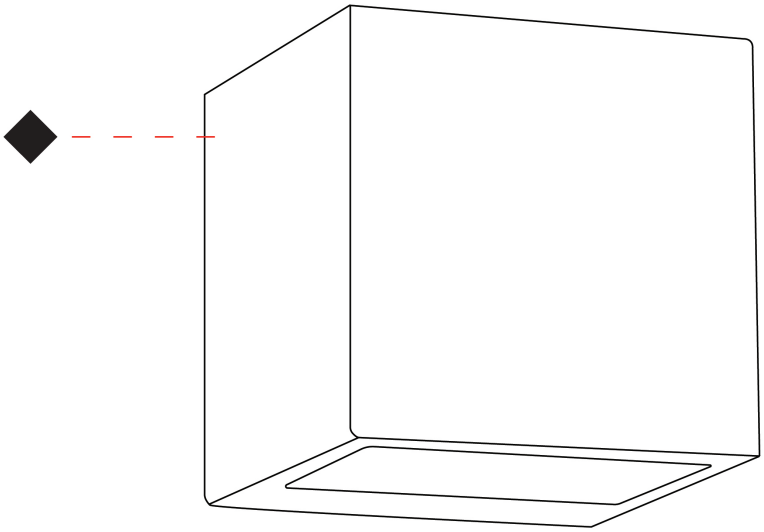

E



Zaneen Group Inc. © 2024, T 1800-388-3382, F 416-247-9319, www.zaneen.com

Available for International specifications by adding 'INT' at the end of the existing Model #. For assistance on 'custom' specifications, contact zteam@zaneen.com.
In a constant effort to supply the best product, we reserve the right to change specifications or materials without notice. The most recent specification sheets are found at zaneen.com

ZANEEN®

| | |
|---|---|
| PROJECT | |
| TYPE | |
| SPECIFIER | |
| QUANTITY | |
| DATE | |

# MINI ONE 2.0 SURFACE

**E9W624-** _____ - _____

base number | Color Temperature | Finish Options

*1.To build a product code in our configurator select the specify button on the base model # product page*
*2. To build a manual product code on this datasheet choose from the options listed below in blue font and add the suffix to the base model #*

**GENERAL**

Series: Mini One 2.0
Brand: Platek
Division: Exterior
Mounting Type: Surface
Mounting Location: Wall
Subcategory: Wall Effect

**PHYSICAL**

Shape: Cube
Width (mm): 100
Width (in): 3 15/16
Height (mm): 100
Depth (mm): 100
Height (in): 3 15/16
Depth (in): 3 15/16
Light Distribution: Direct
Screws: No visible screws
Diffuser: Serigraphed extra-clear glass
Fixture Finish: BLK / WHI / GRY / COR / ANT / BRZ
Fixture Material: Aluminum Die Cast

**ELECTRICAL**

Lamp Type: LED
Input Wattage (W): 7.6
Dimming: Non-Dimmable
Driver Included: Yes
Driver Location: Integrated
Driver Type: Constant Current - Universal
Driver Class: Class 2
Input Voltage (V): 120 - 277
Constant Current (MA): 350

**LED**

Number of LEDs: 4
Color Temperature (°K): 2700 / 3000 / 4000
Max. Delivered Lumen (lm): 396
CRI: >90 CRI
Lamp Life (hrs): 60000

**OPTICAL**

Optic°: 2 Opening
Beam Angle: Diffused

**RATINGS AND CERTIFICATIONS**

Certified By: Certified for North American Standards
IP rating: IP65
IK Rating: IK07

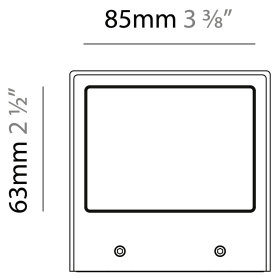


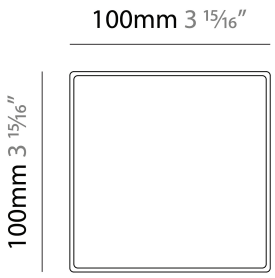


E



Zaneen Group Inc. © 2024, T 1800-388-3382, F 416-247-9319, www.zaneen.com

Available for International specifications by adding 'INT' at the end of the existing Model #. For assistance on 'custom' specifications, contact zteam@zaneen.com.
In a constant effort to supply the best product, we reserve the right to change specifications or materials without notice. The most recent specification sheets are found at zaneen.com

ZANEEN®

| | |
|---|---|
| PROJECT | |
| TYPE | |
| SPECIFIER | |
| QUANTITY | |
| DATE | |

## MINI ONE 2.0 SURFACE

E9W624-

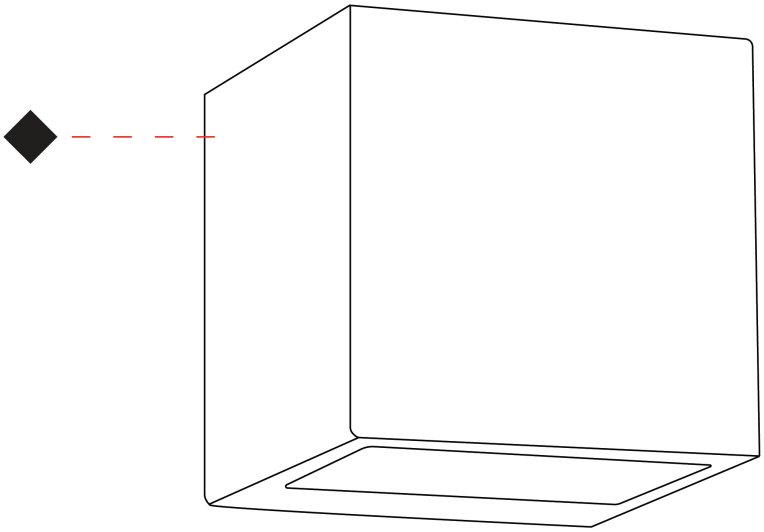

E



Zaneen Group Inc. © 2024, T 1800-388-3382, F 416-247-9319, www.zaneen.com

Available for International specifications by adding 'INT' at the end of the existing Model #. For assistance on 'custom' specifications, contact zteam@zaneen.com.
In a constant effort to supply the best product, we reserve the right to change specifications or materials without notice. The most recent specification sheets are found at zaneen.com

ZANEEN®

| | |
|---|---|
| PROJECT | |
| TYPE | |
| SPECIFIER | |
| QUANTITY | |
| DATE | |

# MINI ONE 2.0 SURFACE

**E9W625- _____ - _____**

base number | Color Temperature | Finish Options

*1.To build a product code in our configurator select the specify button on the base model # product page*
*2. To build a manual product code on this datasheet choose from the options listed below in blue font and add the suffix to the base model #*

**GENERAL**

Series: Mini One 2.0
Brand: Platek
Division: Exterior
Mounting Type: Surface
Mounting Location: Wall
Subcategory: Wall Effect

**PHYSICAL**

Shape: Cube
Width (mm): 100
Width (in): 3 15/16
Height (mm): 100
Depth (mm): 100
Height (in): 3 15/16
Depth (in): 3 15/16
Light Distribution: Asymmetric
Screws: No visible screws
Diffuser: Serigraphed extra-clear glass
Fixture Finish: BLK / WHI / GRY / COR / ANT / BRZ
Fixture Material: Aluminum Die Cast

**ELECTRICAL**

Lamp Type: LED
Input Wattage (W): 6.8
Dimming: Non-Dimmable
Driver Included: Yes
Driver Location: Integrated
Driver Type: Constant Current - Universal
Driver Class: Class 2
Input Voltage (V): 120 - 277
Constant Current (MA): 350

**LED**

Number of LEDs: 1
Color Temperature (°K): 2700 / 3000 / 4000
Max. Delivered Lumen (lm): 290
CRI: >90 CRI
Lamp Life (hrs): 60000

**OPTICAL**

Optic°: 1 Opening
Beam Angle: Diffused

**RATINGS AND CERTIFICATIONS**

Certified By: Certified for North American Standards
IP rating: IP65
IK Rating: IK07

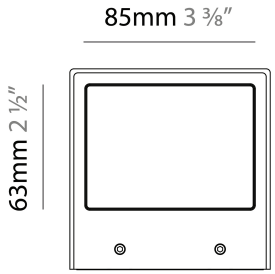


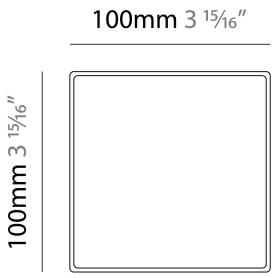




Zaneen Group Inc. © 2024, T 1800-388-3382, F 416-247-9319, www.zaneen.com

Available for International specifications by adding 'INT' at the end of the existing Model #. For assistance on 'custom' specifications, contact zteam@zaneen.com.
In a constant effort to supply the best product, we reserve the right to change specifications or materials without notice. The most recent specification sheets are found at zaneen.com

ZANEEN®

| | |
|---|---|
| PROJECT | |
| TYPE | |
| SPECIFIER | |
| QUANTITY | |
| DATE | |

## MINI ONE 2.0 SURFACE

E9W625-

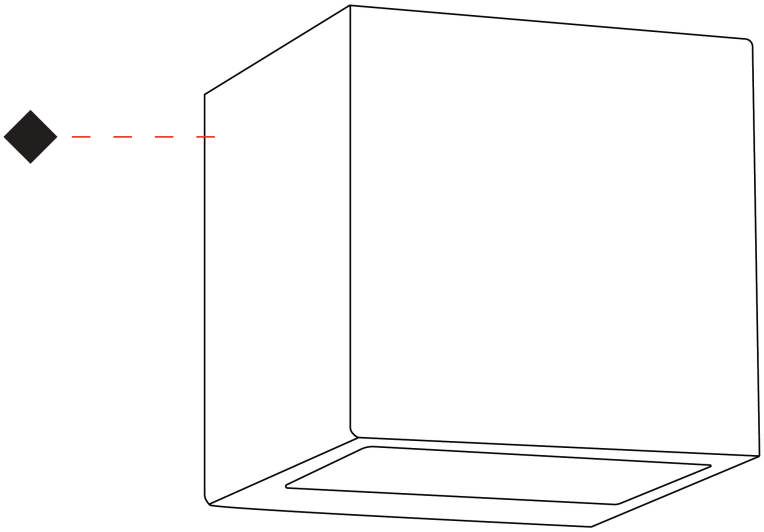

E



Zaneen Group Inc. © 2024, T 1800-388-3382, F 416-247-9319, www.zaneen.com

Available for International specifications by adding 'INT' at the end of the existing Model #. For assistance on 'custom' specifications, contact zteam@zaneen.com.
In a constant effort to supply the best product, we reserve the right to change specifications or materials without notice. The most recent specification sheets are found at zaneen.com

ZANEEN®

| | |
|---|---|
| PROJECT | |
| TYPE | |
| SPECIFIER | |
| QUANTITY | |
| DATE | |

# MINI ONE 2.0 SURFACE

**E9W626- _____ - _____**

base number | Color Temperature | Finish Options

*1.To build a product code in our configurator select the specify button on the base model # product page*
*2. To build a manual product code on this datasheet choose from the options listed below in blue font and add the suffix to the base model #*

**GENERAL**

Series: Mini One 2.0
Brand: Platek
Division: Exterior
Mounting Type: Surface
Mounting Location: Wall
Subcategory: Wall Effect

**PHYSICAL**

Shape: Cube
Width (mm): 100
Width (in): 3 15/16
Height (mm): 100
Depth (mm): 100
Height (in): 3 15/16
Depth (in): 3 15/16
Light Distribution: Asymmetric
Screws: No visible screws
Diffuser: Serigraphed extra-clear glass
Fixture Finish: BLK / WHI / GRY / COR / ANT / BRZ
Fixture Material: Aluminum Die Cast

**ELECTRICAL**

Lamp Type: LED
Input Wattage (W): 7.6
Dimming: Non-Dimmable
Driver Included: Yes
Driver Location: Integrated
Driver Type: Constant Current - Universal
Driver Class: Class 2
Input Voltage (V): 120 - 277
Constant Current (MA): 350

**LED**

Number of LEDs: 4
Color Temperature (°K): 2700 / 3000 / 4000
Max. Delivered Lumen (lm): 580
CRI: >90 CRI
Lamp Life (hrs): 60000

**OPTICAL**

Beam Angle: Diffused

**RATINGS AND CERTIFICATIONS**

Certified By: Certified for North American Standards
IP rating: IP65
IK Rating: IK07

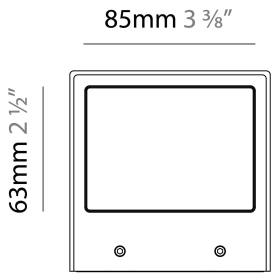


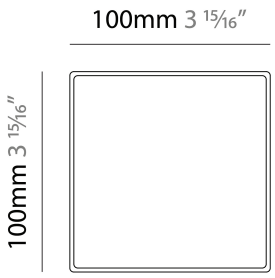




Zaneen Group Inc. © 2024, T 1800-388-3382, F 416-247-9319, www.zaneen.com

Available for International specifications by adding 'INT' at the end of the existing Model #. For assistance on 'custom' specifications, contact zteam@zaneen.com.
In a constant effort to supply the best product, we reserve the right to change specifications or materials without notice. The most recent specification sheets are found at zaneen.com

ZANEEN®

| | |
|---|---|
| PROJECT | |
| TYPE | |
| SPECIFIER | |
| QUANTITY | |
| DATE | |

## MINI ONE 2.0 SURFACE

E9W626-

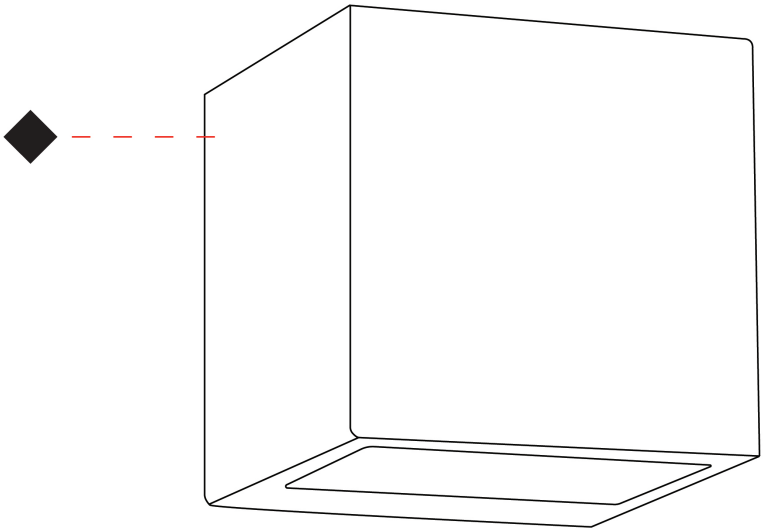

E



Zaneen Group Inc. © 2024, T 1800-388-3382, F 416-247-9319, www.zaneen.com

Available for International specifications by adding 'INT' at the end of the existing Model #. For assistance on 'custom' specifications, contact zteam@zaneen.com.
In a constant effort to supply the best product, we reserve the right to change specifications or materials without notice. The most recent specification sheets are found at zaneen.com

ZANEEN®

| | |
|---|---|
| PROJECT | |
| TYPE | |
| SPECIFIER | |
| QUANTITY | |
| DATE | |

# MINI ONE 2.0 SURFACE

**E9W627-** _____ - _____

base number | Color Temperature | Finish Options

*1.To build a product code in our configurator select the specify button on the base model # product page*
*2. To build a manual product code on this datasheet choose from the options listed below in blue font and add the suffix to the base model #*

**GENERAL**

Series: Mini One 2.0
Brand: Platek
Division: Exterior
Mounting Type: Surface
Mounting Location: Wall
Subcategory: Wall Effect

**PHYSICAL**

Shape: Cube
Width (mm): 100
Width (in): 3 15/16
Height (mm): 100
Depth (mm): 100
Height (in): 3 15/16
Depth (in): 3 15/16
Light Distribution: Asymmetric
Screws: No visible screws
Diffuser: Serigraphed extra-clear glass
Fixture Finish: BLK / WHI / GRY / COR / ANT / BRZ
Fixture Material: Aluminum Die Cast

**ELECTRICAL**

Lamp Type: LED
Input Wattage (W): 11
Dimming: Non-Dimmable
Driver Included: No
Driver Location: Remote
Driver Type: Constant Current - 120Vac
Driver Class: Class 2
Input Voltage (V): 120 - 277
Constant Current (MA): 700

**LED**

Number of LEDs: 1
Color Temperature (°K): 2700 / 3000 / 4000
Max. Delivered Lumen (lm): 535
CRI: >90 CRI
Lamp Life (hrs): 60000

**OPTICAL**

Optic°: 12
Beam Angle: Diffused

**RATINGS AND CERTIFICATIONS**

Certified By: Certified for North American Standards
IP rating: IP65
IK Rating: IK07

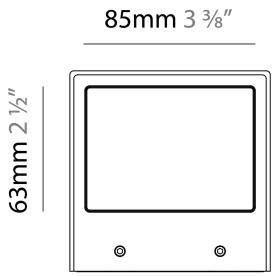


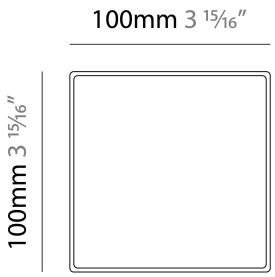


E



Zaneen Group Inc. © 2024, T 1800-388-3382, F 416-247-9319, www.zaneen.com

Available for International specifications by adding 'INT' at the end of the existing Model #. For assistance on 'custom' specifications, contact zteam@zaneen.com.
In a constant effort to supply the best product, we reserve the right to change specifications or materials without notice. The most recent specification sheets are found at zaneen.com

ZANEEN®

| | |
|---|---|
| PROJECT | |
| TYPE | |
| SPECIFIER | |
| QUANTITY | |
| DATE | |

## MINI ONE 2.0 SURFACE

E9W627-

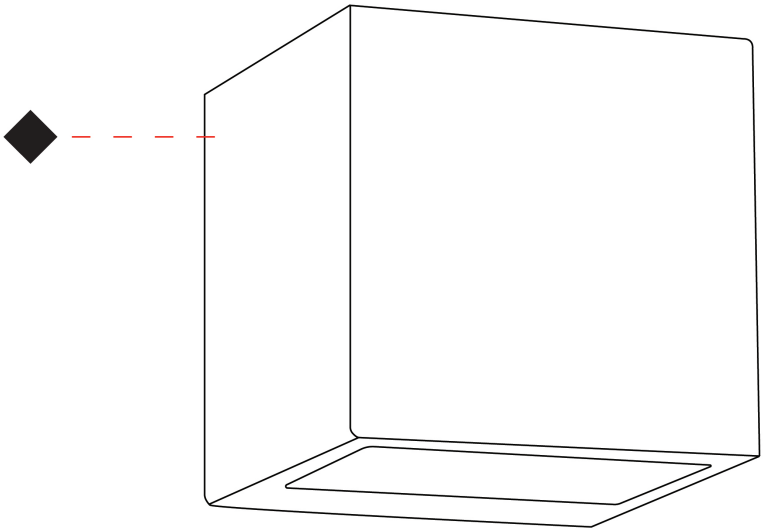

E



Zaneen Group Inc. © 2024, T 1800-388-3382, F 416-247-9319, www.zaneen.com

Available for International specifications by adding 'INT' at the end of the existing Model #. For assistance on 'custom' specifications, contact zteam@zaneen.com.
In a constant effort to supply the best product, we reserve the right to change specifications or materials without notice. The most recent specification sheets are found at zaneen.com

ZANEEN®

| | |
|---|---|
| PROJECT | |
| TYPE | |
| SPECIFIER | |
| QUANTITY | |
| DATE | |

# MINI ONE 2.0 SURFACE

**E9W628- _____ - _____**

base number | Color Temperature | Finish Options

*1.To build a product code in our configurator select the specify button on the base model # product page*
*2. To build a manual product code on this datasheet choose from the options listed below in blue font and add the suffix to the base model #*

**GENERAL**

Series: Mini One 2.0
Brand: Platek
Division: Exterior
Mounting Type: Surface
Mounting Location: Wall
Subcategory: Wall Effect

**PHYSICAL**

Shape: Cube
Width (mm): 100
Width (in): 3 15/16
Height (mm): 100
Depth (mm): 100
Height (in): 3 15/16
Depth (in): 3 15/16
Light Distribution: Asymmetric
Screws: No visible screws
Diffuser: Serigraphed extra-clear glass
Fixture Finish: BLK / WHI / GRY / COR / ANT / BRZ
Fixture Material: Aluminum Die Cast

**ELECTRICAL**

Lamp Type: LED
Input Wattage (W): 11
Dimming: Non-Dimmable
Driver Included: No
Driver Location: Remote
Driver Type: Constant Current - 120Vac
Driver Class: Class 2
Input Voltage (V): 120 - 277
Constant Current (MA): 700

**LED**

Number of LEDs: 2
Color Temperature (°K): 2700 / 3000 / 4000
Max. Delivered Lumen (lm): 240
CRI: >90 CRI
Lamp Life (hrs): 60000

**OPTICAL**

Optic°: 60
Beam Angle: Diffused

**RATINGS AND CERTIFICATIONS**

Certified By: Certified for North American Standards
IP rating: IP65
IK Rating: IK07

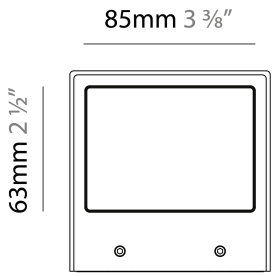


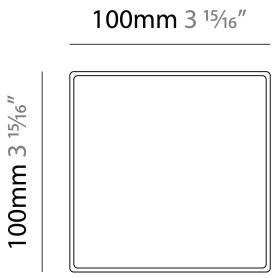




Zaneen Group Inc. © 2024, T 1800-388-3382, F 416-247-9319, www.zaneen.com

Available for International specifications by adding 'INT' at the end of the existing Model #. For assistance on 'custom' specifications, contact zteam@zaneen.com.
In a constant effort to supply the best product, we reserve the right to change specifications or materials without notice. The most recent specification sheets are found at zaneen.com

ZANEEN®

| | |
|---|---|
| PROJECT | |
| TYPE | |
| SPECIFIER | |
| QUANTITY | |
| DATE | |

# MINI ONE 2.0 SURFACE

E9W628-

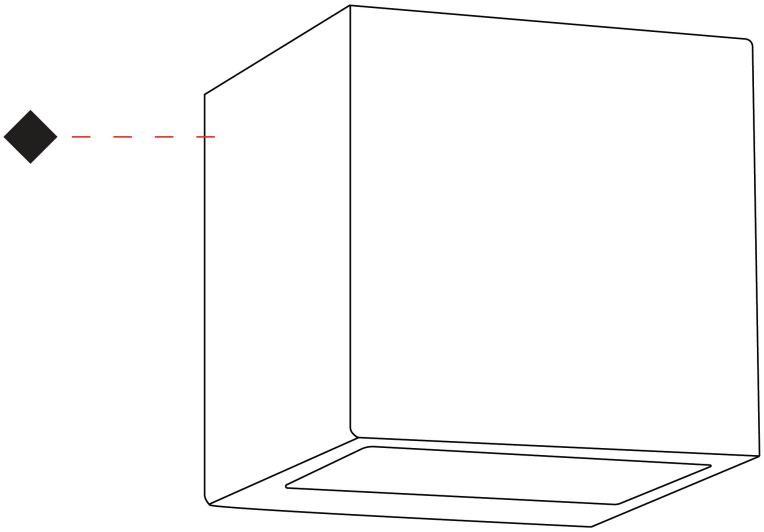

E



Zaneen Group Inc. © 2024, T 1800-388-3382, F 416-247-9319, www.zaneen.com

Available for International specifications by adding 'INT' at the end of the existing Model #. For assistance on 'custom' specifications, contact zteam@zaneen.com.
In a constant effort to supply the best product, we reserve the right to change specifications or materials without notice. The most recent specification sheets are found at zaneen.com

ZANEEN®

| | |
|---|---|
| PROJECT | |
| TYPE | |
| SPECIFIER | |
| QUANTITY | |
| DATE | |

# MINI ONE 2.0 SURFACE

**E9W629- _____ - _____**

base number | Color Temperature | Finish Options

*1.To build a product code in our configurator select the specify button on the base model # product page*
*2. To build a manual product code on this datasheet choose from the options listed below in blue font and add the suffix to the base model #*

**GENERAL**

Series: Mini One 2.0
Brand: Platek
Division: Exterior
Mounting Type: Surface
Mounting Location: Wall
Subcategory: Wall Effect

**PHYSICAL**

Shape: Cube
Width (mm): 100
Width (in): 3 15/16
Height (mm): 100
Depth (mm): 100
Height (in): 3 15/16
Depth (in): 3 15/16
Light Distribution: Asymmetric
Screws: No visible screws
Diffuser: Serigraphed extra-clear glass
Fixture Finish: BLK / WHI / GRY / COR / ANT / BRZ
Fixture Material: Aluminum Die Cast

**ELECTRICAL**

Lamp Type: LED
Input Wattage (W): 11
Dimming: Non-Dimmable
Driver Included: No
Driver Location: Remote
Driver Type: Constant Current - 120Vac
Driver Class: Class 2
Input Voltage (V): 120 - 277
Constant Current (MA): 700

**LED**

Number of LEDs: 2
Color Temperature (°K): 2700 / 3000 / 4000
Max. Delivered Lumen (lm): 480
CRI: >90 CRI
Lamp Life (hrs): 60000

**OPTICAL**

Optic°: 60
Beam Angle: Diffused

**RATINGS AND CERTIFICATIONS**

Certified By: Certified for North American Standards
IP rating: IP65
IK Rating: IK07

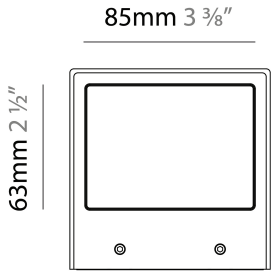


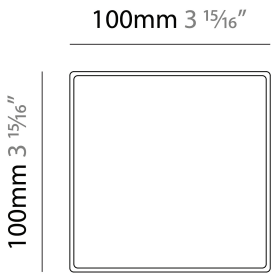


E



Zaneen Group Inc. © 2024, T 1800-388-3382, F 416-247-9319, www.zaneen.com

Available for International specifications by adding 'INT' at the end of the existing Model #. For assistance on 'custom' specifications, contact zteam@zaneen.com.
In a constant effort to supply the best product, we reserve the right to change specifications or materials without notice. The most recent specification sheets are found at zaneen.com

ZANEEN®

| | |
|---|---|
| PROJECT | |
| TYPE | |
| SPECIFIER | |
| QUANTITY | |
| DATE | |

## MINI ONE 2.0 SURFACE

E9W629-

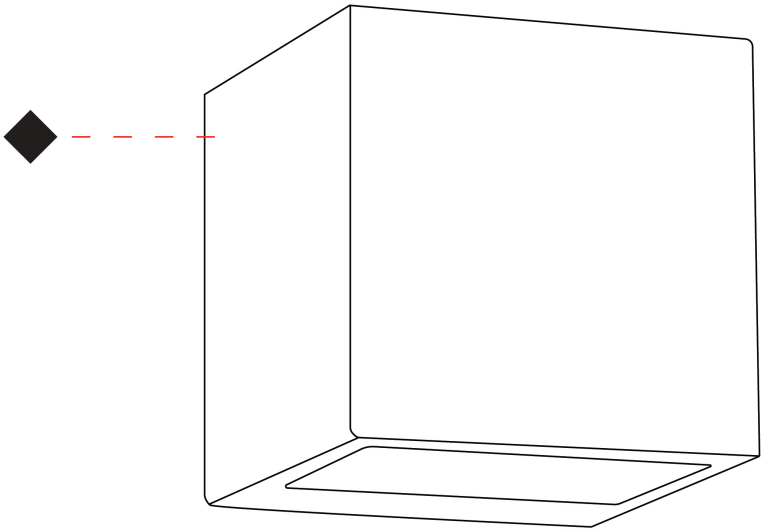

E



Zaneen Group Inc. © 2024, T 1800-388-3382, F 416-247-9319, www.zaneen.com

Available for International specifications by adding 'INT' at the end of the existing Model #. For assistance on 'custom' specifications, contact zteam@zaneen.com.
In a constant effort to supply the best product, we reserve the right to change specifications or materials without notice. The most recent specification sheets are found at zaneen.com

ZANEEN®

# MINI ONE 2.0

## COLOR FINISH CHART

| | |
|---|---|
| PROJECT | |
| TYPE | |
| SPECIFIER | |
| QUANTITY | |
| DATE | |

**Fixture Finish**

| Black - BLK | White - WHI | Gray - GRY | Corten - COR | Anthracite - ANT | Bronze - BRZ |
|---|---|---|---|---|---|

**Digital:** Not all screens are calibrated the same, and therefore, colors will appear differently between screens.
**Physical:** When texture is involved, there will be variations in color, character and tone within a product series and between product families.



Zaneen Group Inc. © 2024, T 1800-388-3382, F 416-247-9319, www.zaneen.com

Available for International specifications by adding 'INT' at the end of the existing Model #. For assistance on 'custom' specifications, contact zteam@zaneen.com.
In a constant effort to supply the best product, we reserve the right to change specifications or materials without notice. The most recent specification sheets are found at zaneen.com

ZANEEN®

# MINI ONE 2.0

| | |
|---|---|
| PROJECT | |
| TYPE | |
| SPECIFIER | |
| QUANTITY | |
| DATE | |

## LEGEND

| | | | | | |
|---|---|---|---|---|---|
| | floor-mounted | | pivotable | | special LED (upon request) RGB, RGBW, tunable, gold+, meat+, art+, fashion+ |
| | wall and ceiling: recessed and surface mounted | | rotating | | warm dim / natural dimming LED |
| | ceiling-mounted and wall-mounted | | illuminate tilted | | rechargeable battery powered |
| | wall-mounted | | color of suspension cable | | fixture with natural vivid LED (upon request) |
| | omni-directional light distribution | | length of suspension cable | CRI | color rendering index |
| | direct light distribution | | reflector degree selection | °K | color temperature |
| | direct/indirect light distribution | | super spot | LM | lumen (luminous flux) |
| | indirect light distribution | | lens | LM/W | efficacy (lumens per watt) |
| | asymmetric light distribution | | lens pack | UGR | Unified Glare Rating (UGR) range from 5-40 |
| | aura light distribution | | shine ring | 316 | marine grade (AISI 316 stainless steel) |
| | round wall or ceiling cut-out | | integrated shine ring with diffuser | | walk on |
| | square wall or ceiling cut-out | | free individual colors 01-29 | | drive on |
| | the supplied jig specifies the cutout dimensions | | individual colors: 00 (free of charge), 01-25 (extra charge) | DSC | Dark Sky Compliance |
| | minimum distance (meters) lamp - object | | luminaire part to be colored (F1) | | Americans with Disabilities Act (less than 4" off the wall located between 27"-84" from floor) |
| | recessed depth | | luminaire part to be colored (F2) | | lamp protected against explosion |
| | ceiling thickness in mm | | luminaire part to be colored (F3) | | blown glass using traditional methods by master glass blower |
| | ceiling thickness selection | | luminaire part to be colored (F4) | | acoustic material |
| | dimmable DP (phase), DV (0-10V), DD (dali), DS (step-dim) | | luminaire part to be colored (F5) | | protection class I, protection insulation |
| | included or excluded LED driver/transformer/ control gear | | color of 3-circuit adaptor | | protection class II, protection insulation |
| | separately switchable | | indirect diffuser | | ETL Certified to UL and CSA Standards |
| | sensor | D | direct diffuser | | UL Certified to UL and CSA Standards |
| | remote control | | ball-proof (upon request) | | CSA Certified to UL and CSA Standards |
| | available upon request | | accessory | | Certified for North American Standards |

## IP RATING

| | |
|---|---|
| IP20 | protected against ingress of solid bodies greater than 12.5mm (finger) |
| IP33 | protected against ingress of solid bodies greater than 2.5mm<br>protected against sprays of water up to 60 degrees from the vertical (rain) |
| IP40 | protected against ingress of solid bodies greater than 1mm (wire)<br>no protection against the ingress of moisture |
| IP43 | protected against ingress of solid bodies greater than 1mm (wire)<br>protected against sprays of water up to 60 degrees from the vertical (rain) |
| IP44 | protected against ingress of solid bodies greater than 1mm (wire)<br>protected against water splashed from all directions |
| IP54 | protected against limited ingress of dust (wet rooms/covered outdoor areas)<br>protected against water splashed from all directions |
| IP65 | protected against ingress of dust<br>protected against jets of water |
| IP66 | protected against ingress of dust<br>protected against powerful jets of water or heavy seas |
| IP67 | protected against ingress of dust<br>protected against immersion of water between 15cm - 1m for 30 minutes |
| IP68 | protected against ingress of dust<br>protected against immersion of water under pressure for long periods |

## IK RATING

| | |
|---|---|
| IK01 | protected against 0.14 joules impact (equivalent to 0.25kg mass dropped from 56mm above the surface) |
| IK02 | protected against 0.2 joules impact (equivalent to 0.25kg mass dropped from 80mm above the surface) |
| IK03 | protected against 0.35 joules impact (equivalent to 0.25kg mass dropped from 140mm above the surface) |
| IK04 | protected against 0.5 joules impact (equivalent to 0.25kg mass dropped from 200mm above the surface) |
| IK05 | protected against 0.7 joules impact (equivalent to 0.25kg mass dropped from 280mm above the surface) |
| IK06 | protected against 1 joules impact (equivalent to 0.25kg mass dropped from 400mm above the surface) |
| IK07 | protected against 2 joules impact (equivalent to 0.5kg mass dropped from 400mm above the surface) |
| IK08 | protected against 5 joules impact (equivalent to 1.7kg mass dropped from 300mm above the surface) |
| IK09 | protected against 10 joules impact (equivalent to 5.0kg mass dropped from 200mm above the surface) |
| IK10 | protected against 20 joules impact (equivalent to 5.0kg mass dropped from 400mm above the surface) |